A7lb

SOLID RIM AS STARTER JOIST
with Ladder Blocking

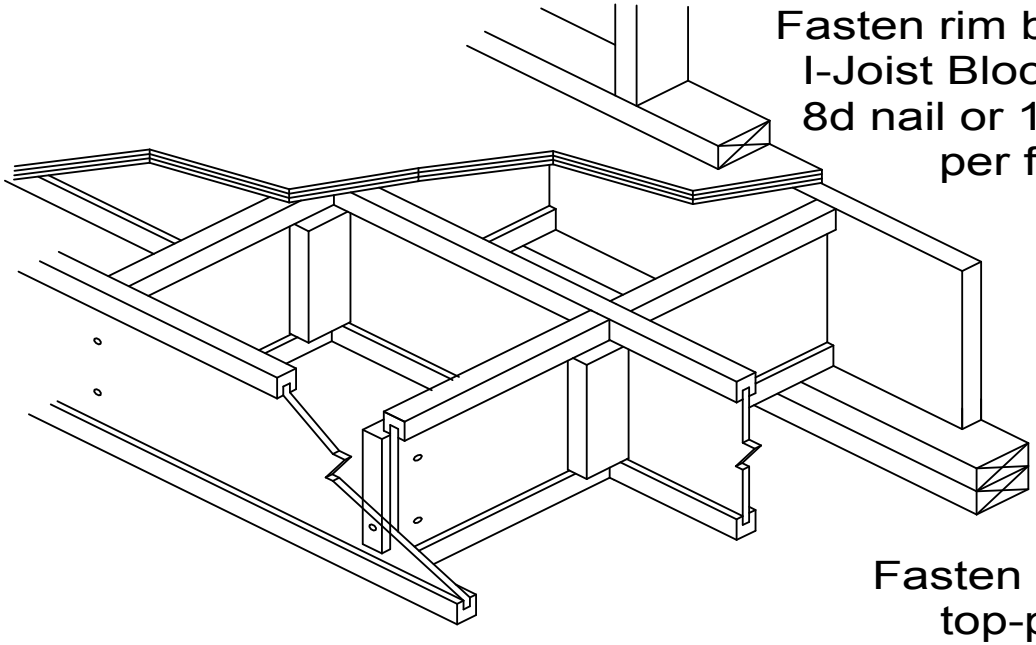

Fasten rim board to each I-Joist Block using one 8d nail or 10d box nail per flange

Fasten rim board to top-plate with 8d nail at 6" o.c.

(when used for shear transfer nail to bearing plate with same nailing schedule as decking)

Fasten I-Joists to Connection Block with two (2) 8d box nails through the web and into the block.

Cut connection block such that there is a 1/8" gap between the block and the I-Joist flange- both top and bottom